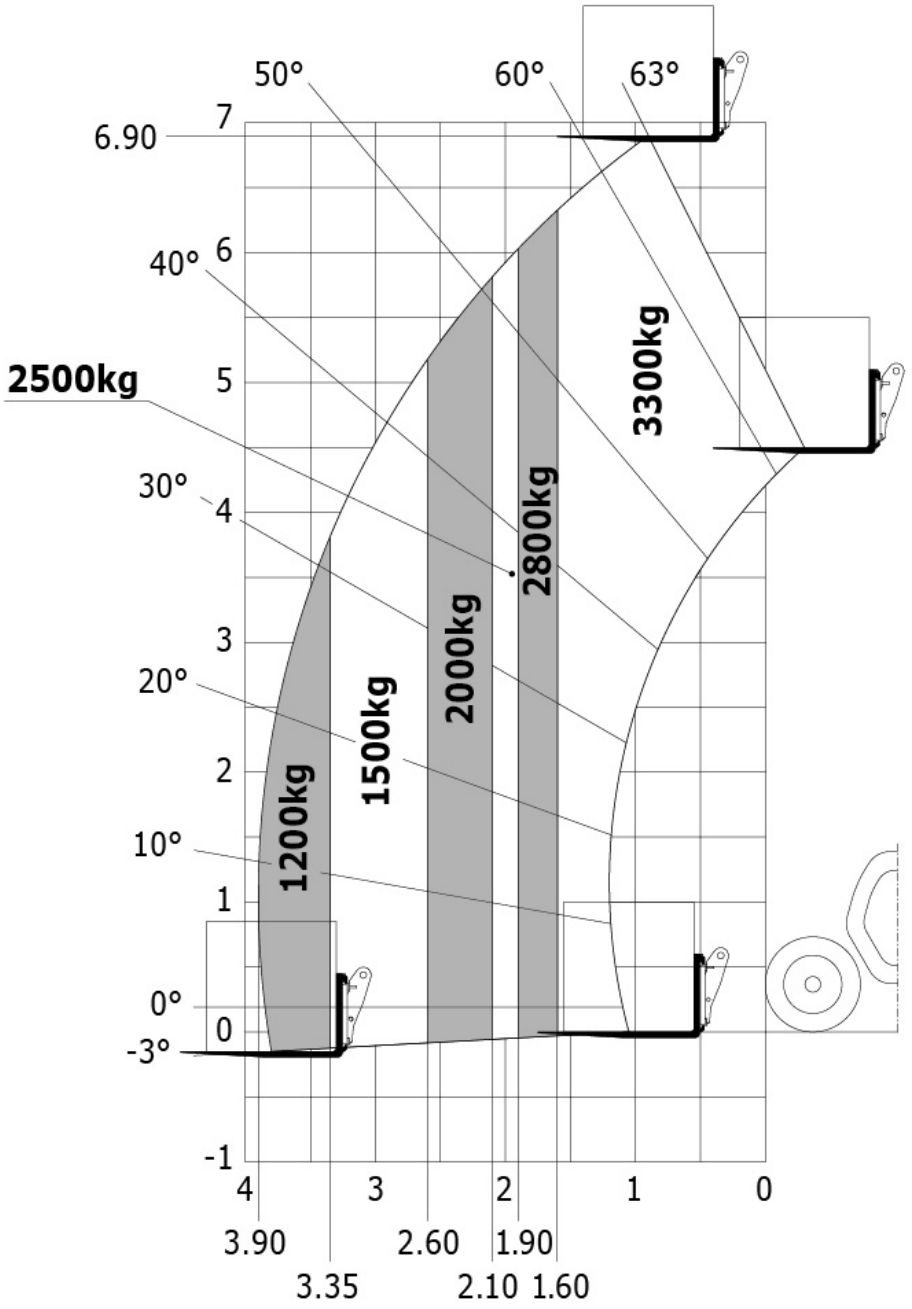

Lifting height	6.9 m	22'8"
Lifting capacity	3300 kg	7275 lb
Max reach	3.9 m	12'11"
Drawbar pull	7380 dan	
Lifting time (unladen)		6.75 s
Lowering time (unladen)		5.65 s
Boom extension time (unladen)		6.5 s
Boom retraction time (unladen)		3.9 s
Crowd		3.15Â s
Dump		2.55Â s

Dimensions

Length (up to the back of the fork)	4.85 m	15'1"
Wheelbase length	2.81 m	9'2"
Width	2.39 m	7'1"
Height	2.38 m	7'11"
Weight (unladen)	7015 kg	15465 lb
Turning radius	3.92 m	12'1"
Ground clearance	0.44 m	0'2"

Scale drawing (side view) :

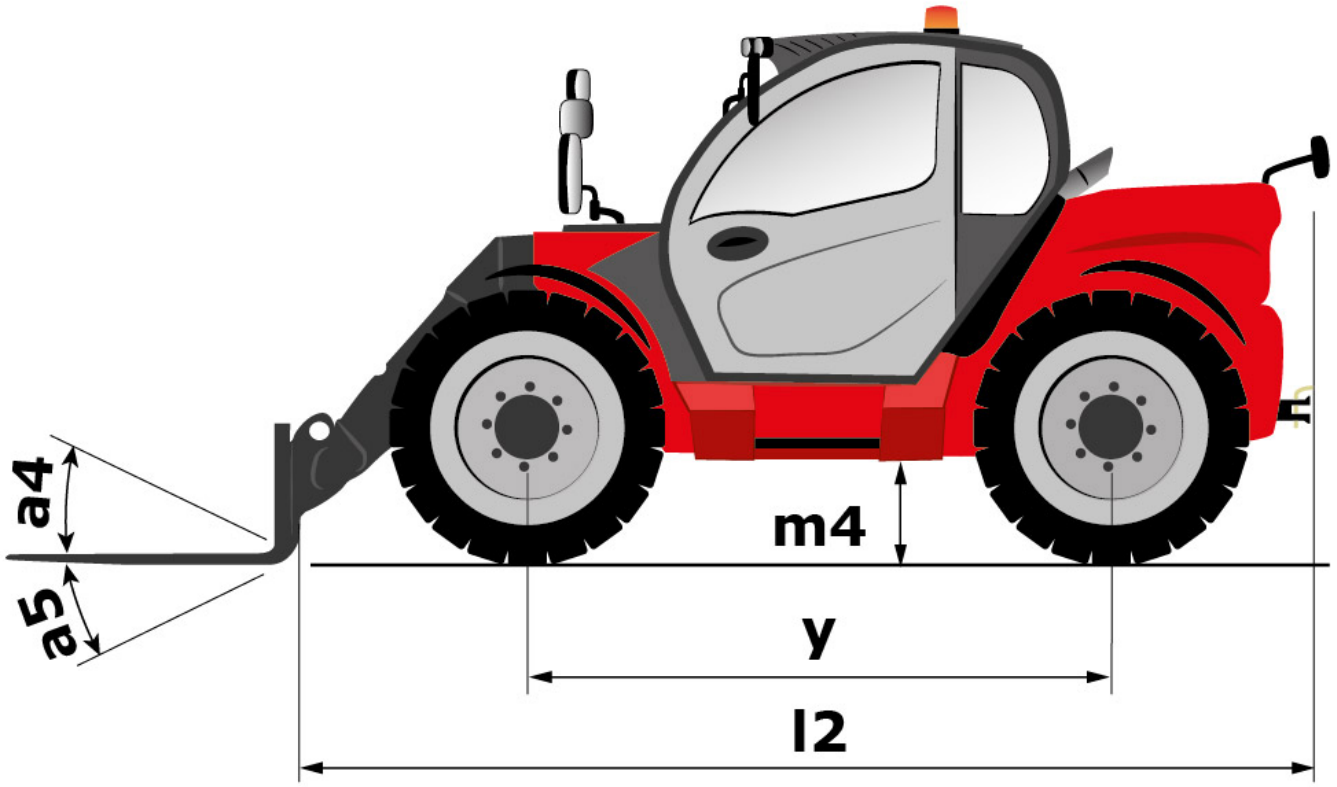

Scale drawing (top view) :

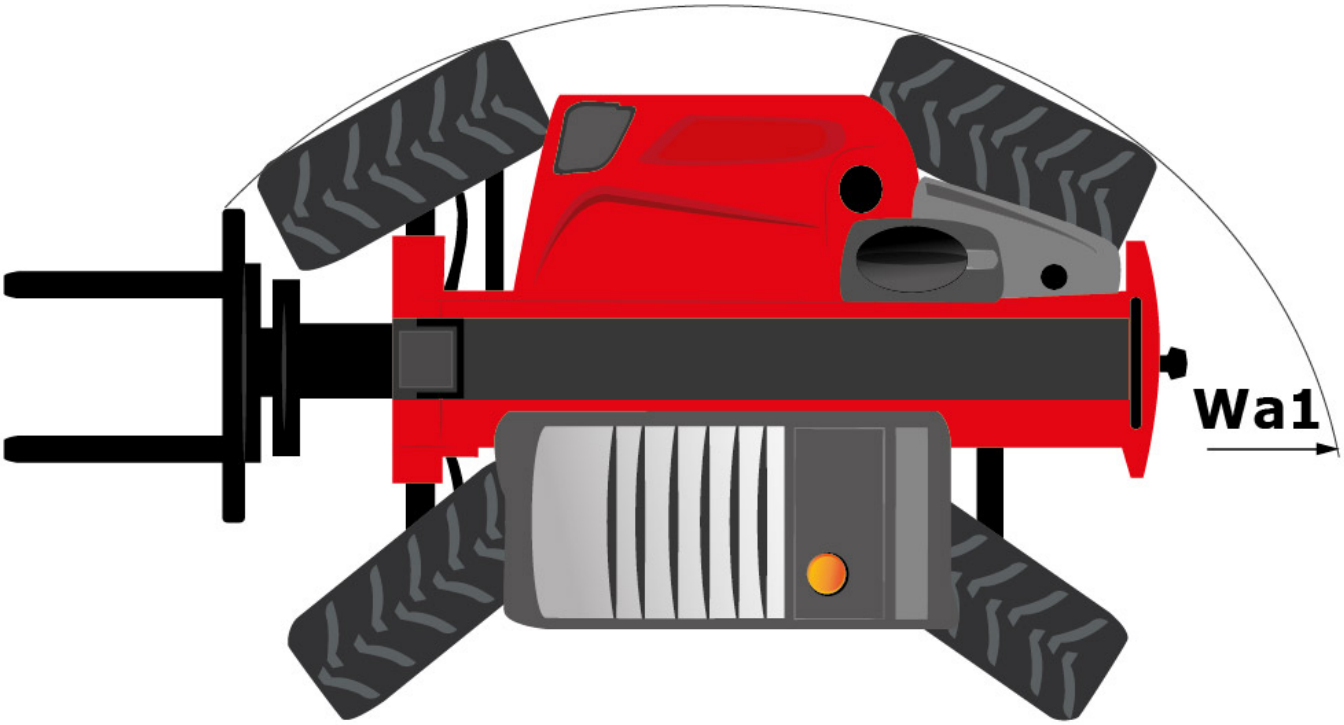

Scale drawing (front/rear view) :

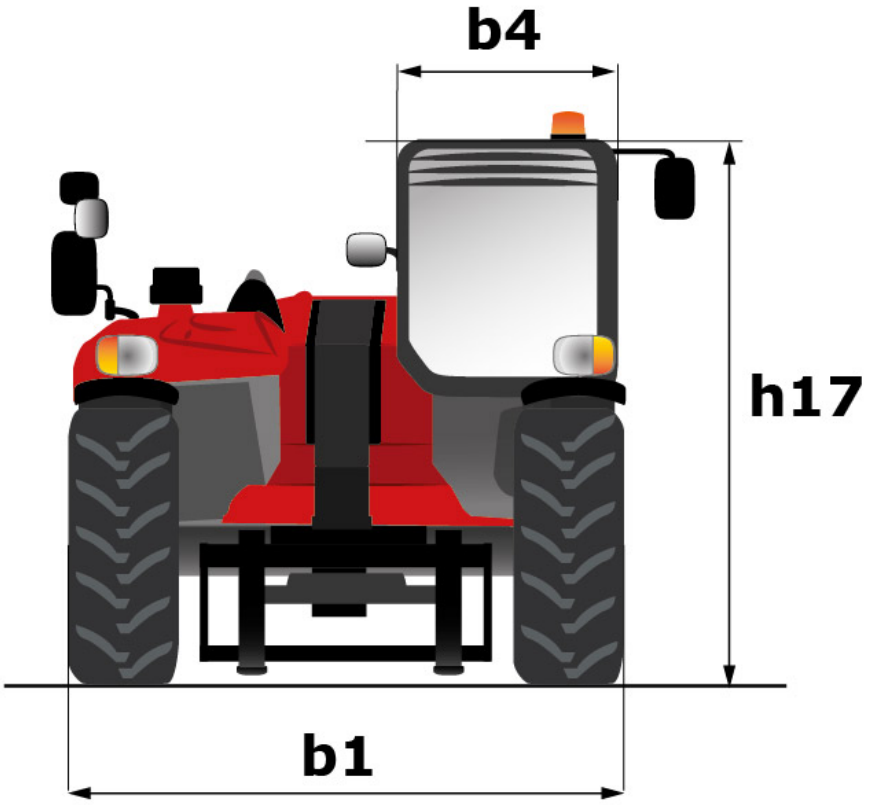

Engine / Battery

Energy		Diesel
Engine brand		Deutz
Engine type		Stage IV / Tier 4 Final
Power	116 ch	116 hp
Power		85Â KW
Max. Torque @ Rotation		410 Nm @ 1600 tr/min
Number of cylinders		4
Total capacity	3621 cm3	220 in3
Transmission type		Torque converter